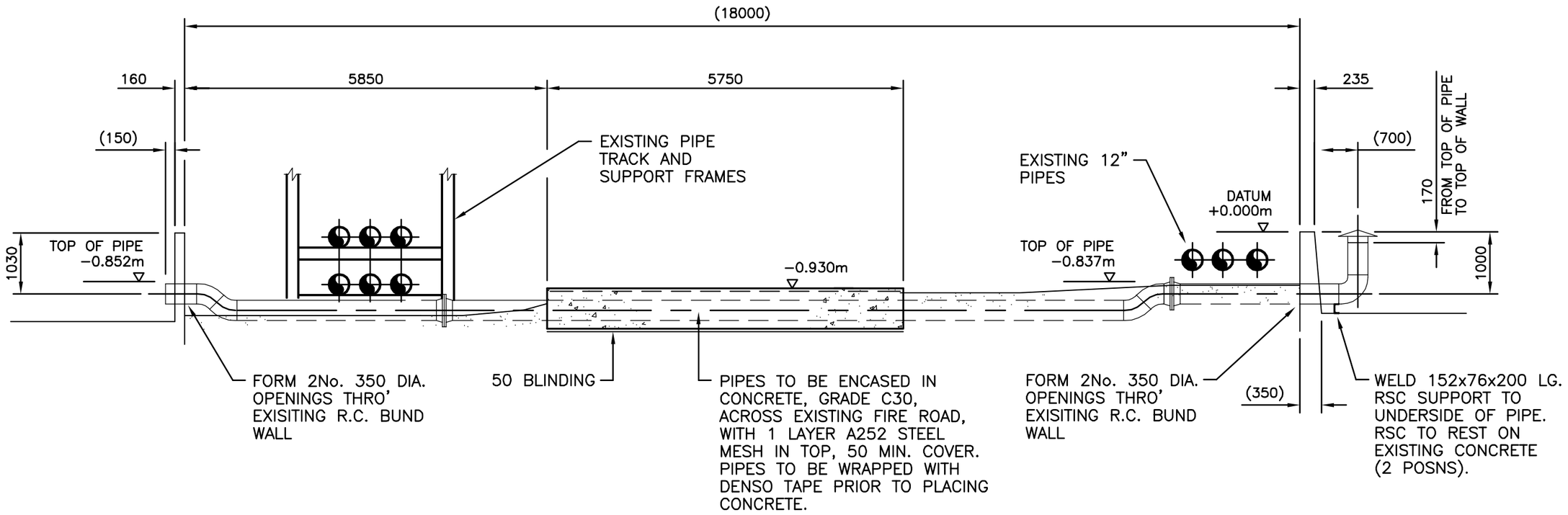

SECTION A–A

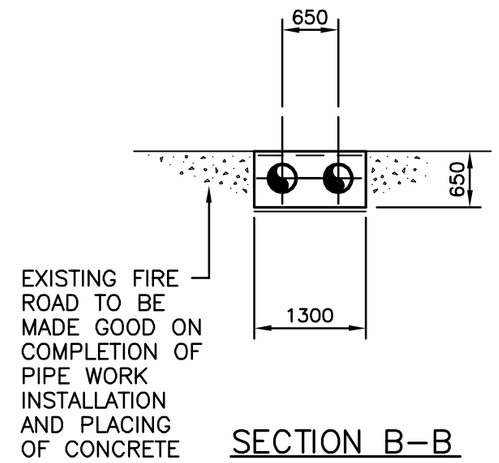

SECTION B–B

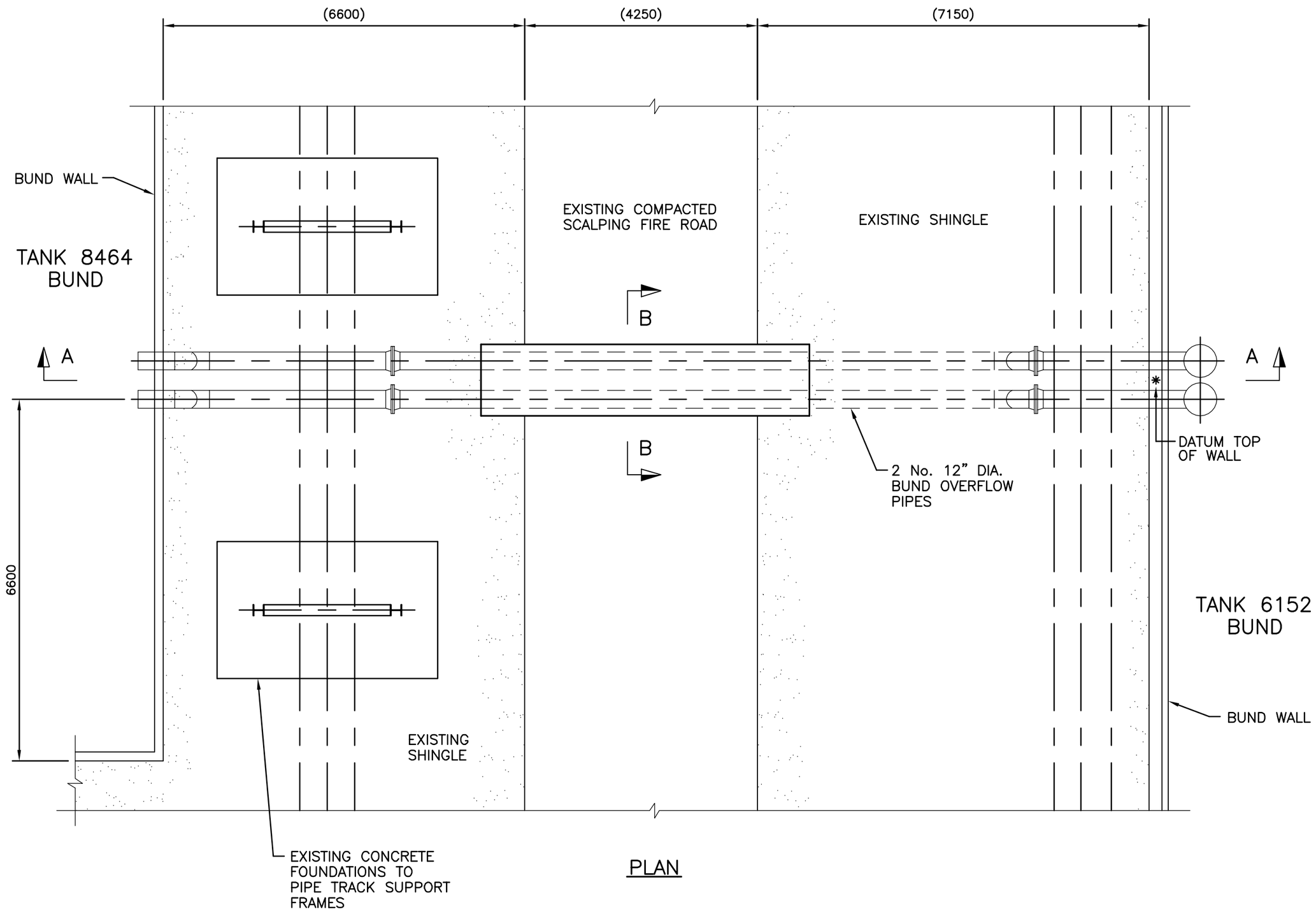

PLAN

NOTES
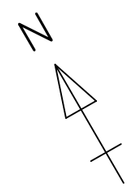
1. WHERE PIPES PASS THROUGH BUND WALLS PROVIDE 12mm THK. FLEXCELL EXPANSION JOINT FILLER BETWEEN PIPE AND CONCRETE, AND 20mm DEEP THIOFLEX 600 SEALANT BOTH SIDES OF WALL.
2. BURIED PIPEWORK TO BE WRAPPED WITH DENSO TAPE IN ACCORDANCE WITH ESSO ENGINEERING STANDARD No. B3–19–51 REV.4.
3. EXPOSED PIPEWORK TO BE PAINTED IN ACCORDANCE WITH ESSO ENGINEERING SPECIFICATION No. 1020 REV.10 COLOUR BLACK 00 E 53.
4. ROAD CROSSING CONCRETE TO BE IN ACCORDANCE WITH ESSO ENGINEERING SPECIFICATION No. 1027 REV.10 SECTION 2.